LUMFIRE FORA

FORA 80 / 100 / 130 / 150 / 180

Lum Fire
Not just heat.
Smart Atmosphere

Electric Fireplace – configurable as 1-, 2-, or 3-sided



Installation, Safety Instructions and Maintenance

Lumfire Fora 80 / 100 / 130 / 150 / 180

AC 220V–240V · 50 Hz · 1400–1600 W

lumfire.com

EN - Page 1 / DE - Seite 17 / IT - Pagina 33 / FR - Page 49 / ES - Página 65 / NL - Pagina 81

CE

Table of Contents

1. MODEL, SERIAL NUMBER AND CONTACT 3
2. IMPORTANT SAFETY INSTRUCTIONS 3
Child Safety 4
Operational Safety 4
2. FURTHER IMPORTANT INFORMATION 4
3. TECHNICAL SPECIFICATIONS 5
4. TECHNICAL DIMENSIONS 5
5. INSTALLATION PREPARATION 6
Package Contents 6
Location Selection 6
Mounting Objects Above the Fireplace 6
Socket 6
Handling the Glass Panel 6
Wall Fixings 7
Notes Before Installation 7
6. INSTALLATION 7
1-, 2- and 3-sided Installation 7
Steps for Configuration Change from Front to Corner Model or Three-sided Model 8
Removal / Installation of the Front Glass Panel 8
7. WALL MOUNTING (SUSPENDED) 9
Mounting on a Flat Wall 9
8. RECESSED WALL INSTALLATION 10
Minimum Dimensions – Front Installation 10
Minimum Dimensions – Corner Installation (with open corner) 11
Minimum Dimensions – Three-sided Installation 11
Installation Steps – Recessed Installation 12
9. LOG SET AND EMBER BED INSTALLATION 12
10. CONTROLS, OPERATION AND MAINTENANCE 13
Touch Control Panel 13
Remote Control 13
Smart App 14
Thermal Cut-off 15
Cleaning 15
Maintenance 15
Troubleshooting 16

© LUMFIRE – All rights reserved

1. MODEL, SERIAL NUMBER AND CONTACT

Please note the model and serial number for future reference.

Model number: LF-FORA-_____

Please enter the selected device size here (e.g. 80 / 100 / 130 / 150 / 180 cm).

Serial number: _____

The serial number can be found on the product label attached to the fireplace.

Contact:
Ofenhaus Südtirol GmbH
Montigglerstraße 19
39057 Eppan an der Weinstraße, IT

info@lumfire.com



At the end of the electrical products useful life it should not be disposed of with household waste. Please recycle where facilities exist. Check with your Local Authority or retailer for recycling advice in your area.

2. IMPORTANT SAFETY INSTRUCTIONS

> ⚠ **WARNING**
> Please read this entire manual carefully before installing or using the appliance.
> Failure to follow the instructions may result in fire, electric shock or serious injury.
> Keep this manual for future reference. If the product is passed on to another person, this manual must accompany the appliance.

- Read all instructions before installing or using the electric fireplace.
- **WARNING: To avoid overheating, the electric fireplace must not be covered.**
- For indoor use only.
- Do NOT use the fireplace near bathtubs, showers or swimming pools.
- Never use the appliance to dry clothing.
- The power connection must not be directly above the heating element.
- The use of an extension cord is NOT recommended.

© LUMFIRE – All rights reserved

Child Safety

- This electric fireplace can be used by children aged 8 years and above, provided they are supervised or have received instruction on safe use.
- Children must not play with the electric fireplace.
- Cleaning and maintenance must not be carried out by children without supervision.
- Children under 3 years of age should be kept away.
- Children between 3 and 8 years of age may only switch the electric fireplace on or off if it has been properly installed and they are supervised.
- Children between 3 and 8 years of age must not connect, adjust, clean or maintain the electric fireplace.

Operational Safety

- Some parts of this appliance can become very hot and cause burns. Special caution is required when children or vulnerable persons are present.
- The heating element becomes hot during operation. Avoid contact with skin.
- Keep flammable materials (furniture, cushions, bedding, paper, clothing, curtains) at least 0.9 m away from the front of the heating element.
- Do not operate the appliance if a malfunction occurs. Disconnect the appliance from the mains and have it checked by a qualified technician.
- Do not use outdoors.
- Do not insert objects into ventilation openings.
- To avoid fire hazard, the air inlets and outlets must not be blocked.
- The heater contains hot and spark-producing components. Do not use it in areas where petrol, paint or flammable vapours are present.
- Use this appliance only as described in this manual.
- The electric fireplace must be properly installed before use.

> ⚠ **WARNING**
> NOTE: The electric fireplace is equipped with an automatic overheating protection.
> To reset: switch off the appliance → unplug → remove cause of overheating → allow appliance to cool down → switch on again.
> NOTE: To avoid hazards from unintentional resetting, the appliance must not be operated via external switching devices (e.g. timers).

2. FURTHER IMPORTANT INFORMATION

Please note the weight of the fireplace before removing it from the packaging and installing it.

- Check whether a second person is required for installation (min. two persons recommended)
- Carefully remove the fireplace from the packaging and ensure that the power cable and the electric fireplace were not damaged during transport.
- Do NOT operate the fireplace if it is damaged.

> ℹ **NOTE**
> In accordance with European Directive 2012/19/EU (WEEE), electrical and electronic equipment must not be disposed of in household waste.
> Please dispose of the appliance responsibly at suitable recycling facilities.

© LUMFIRE – All rights reserved

3. TECHNICAL SPECIFICATIONS

Power supply	220-240 V / 50 Hz / 13 A
Maximum power consumption	1.600 W
Cable length	1.8 m

Sufficient space must be available to allow the fireplace to be comfortably installed in or on a wall. The fireplace must not be forced into an opening that is too small, as this may deform the housing.

The fireplace must be adequately supported. Fixing exclusively to plasterboard is not permitted. A wall support or lintel must be installed.

The fireplace does not require internal air circulation, as air is drawn in from the front and discharged back to the front.

4. TECHNICAL DIMENSIONS

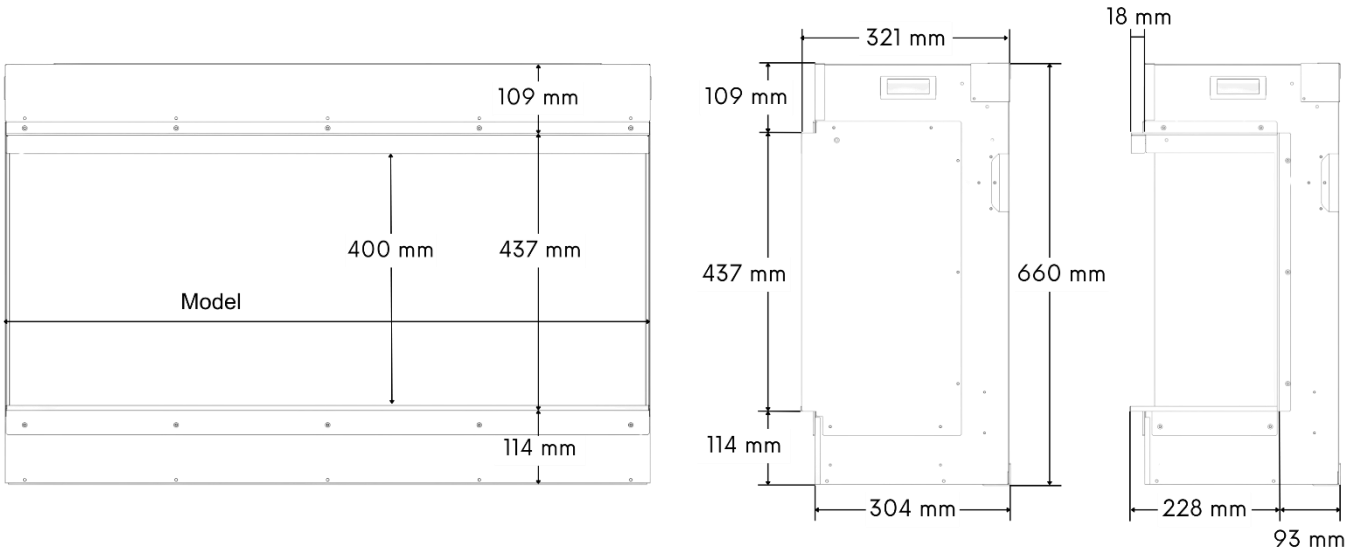

Model	Width (Model)	Weight	Reference
FORA 80	802 mm	43 kg	LF-FORA-080
FORA 100	1002 mm	52 kg	LF-FORA-100
FORA 130	1302 mm	64 kg	LF-FORA-130
FORA 150	1502 mm	72 kg	LF-FORA-150
FORA 180	1802 mm	84 kg	LF-FORA-180

© LUMFIRE – All rights reserved

5. INSTALLATION PREPARATION

Package Contents

- Fora Electric Fireplace
- Log set:
  - Model 800: 5 illuminated logs (with integrated LED) + 3 without illumination
  - Model 1000: 5 illuminated logs (with integrated LED) + 4 without illumination
  - Model 1300: 6 illuminated logs (with integrated LED) + 4 without illumination
  - Model 1500: 7 illuminated logs (with integrated LED) + 5 without illumination
  - Model 1800: 9 illuminated logs (with integrated LED) + 6 without illumination
- Accessory set ember bed
  - small black vermiculite stones
  - broken transparent glass
  - broken black glass
  - large flakes
  - grey stones and black stones
- Decorative strips with magnet
- Wall mounting rails (already pre-mounted on the upper and lower rear edges of the unit; can be unscrewed if not used)
- Remote Control
- Screws with wall plugs
- Manual
- Suction cup and gloves (Keep the suction cup in a safe place after installation, as it facilitates maintenance and service work on the appliance.)

Location Selection

Choose a suitable location that is dry and not near curtains, furniture or heavily frequented areas. For installations with app control, ensure that the fireplace is within range of a **2.4 GHz Wi-Fi network**.

Mounting Objects Above the Fireplace

For temperature-sensitive objects mounted above the fireplace (e.g. televisions, mantelpieces or pictures), always follow the installation specifications of the respective manufacturer of those objects.
Note: In normal heating operation, the temperature of surfaces at a distance of 20 cm above the fireplace does not exceed 40 °C, provided the installation instructions are followed and the air supply and exhaust are not blocked.

Socket

The fireplace must always have an accessible power plug. Do not install the fireplace directly above a socket outlet. It is recommended that the socket outlet be positioned to the side of the appliance. It is recommended to connect the fireplace to a grounded **220–240V socket**. The appliance must be installed in accordance with local electrical regulations. Do not run the power cord under carpets or similar floor coverings. Ensure that the socket outlet is in good condition and that the plug fits securely. Do not use the same circuit with other appliances with high power consumption.

Handling the Glass Panel

The package contents include glass panels. Handle them with particular care during installation and maintenance. Improper handling may result in injury or damage to the appliance. For detailed instructions on removing and installing the glass panel, see Chapter 6 “Installation”.

© LUMFIRE – All rights reserved

Wall Fixings

When mounting on a wall, suitable fixing materials must be used for the respective wall material. Walls and floors are often not completely level. Therefore, ensure that the fireplace is mounted securely and stably.

Notes Before Installation

- Use the dimension tables to create the installation structure.
- The frame of the electric fireplace is not designed to bear weight. Do not place heavy loads on it.
- The fireplace should stand on a stable, level and clean surface.
- **The fireplace does not require internal air circulation, as air is drawn in from the front and discharged back to the front.**
- If the fireplace is installed in an existing chimney, this must be sealed to prevent draughts and dirt.
- The mains switch must remain accessible at all times and must not be covered.
- Die obere Verkleidung im Bereich der Heizung muss aus nicht brennbaren Materialien bestehen.
- Before completing the wall construction, the correct functioning of the appliance must be verified.

6. INSTALLATION

1-, 2- and 3-sided Installation

The Fora electric fireplace can be installed in three configurations:

1-sided (Standard) **Front model**	2-sided Corner model (left or right)	3-sided Three-sided model

By default, the fireplace is supplied as a single-sided version. The side panels can optionally be removed to allow for a two- or three-sided installation.



© LUMFIRE – All rights reserved

Steps for Configuration Change from Front to Corner Model or Three-sided Model

1. Remove the 7 screws from the side panel.
2. Remove the cover plate.
3. Reattach the side panels using the previously removed screws.
4. Attach the magnetic rails to the frame

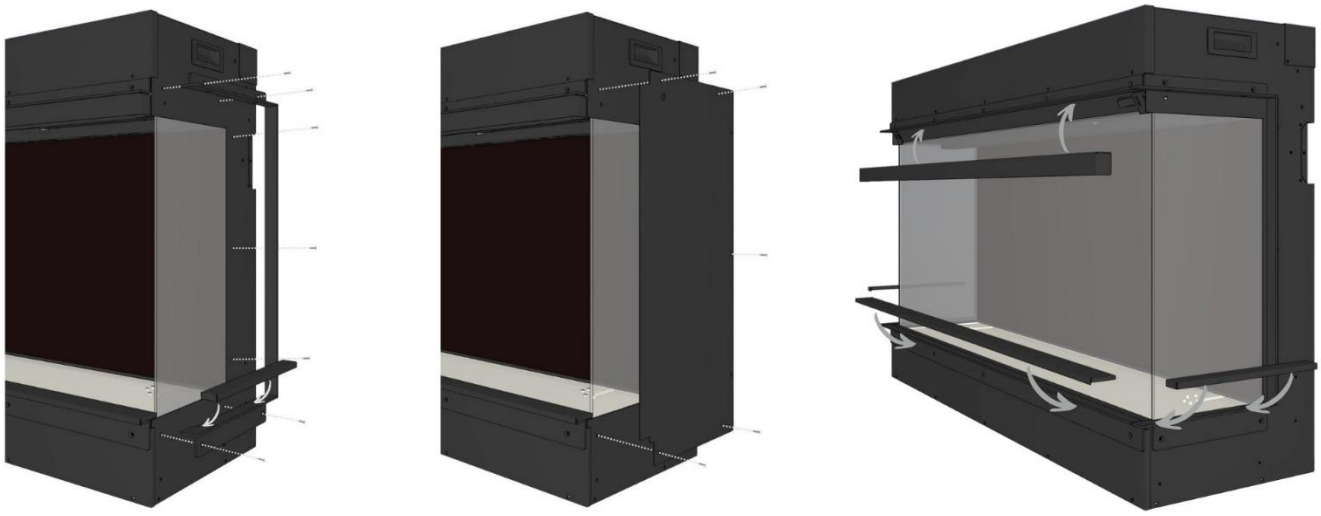

Removal / Installation of the Front Glass Panel

ℹ NOTE
Only switch on the appliance once the front glass panel has been fully installed.

⚠ CAUTION
The glass panel is fragile. Proceed with care. At least two persons are required for the removal and installation of the front glass panel.

For removal:

- Attach the supplied suction cup to the outside of the front glass panel and ensure that it is firmly attached.
- Remove the decorative frame (which is attached with magnets) as well as the upper screws and keep them safe. The frame can then be removed.
- Lift the glass panel using the suction cup, carefully tilt it forwards and then remove it.

Caution: Ensure that the front glass panel does not tip forwards or fall during installation.

For installation:

- For installation, insert the glass panel at a slight lateral angle into the lower guide and then tilt it into an upright position.
- Take the frame and reattach it with the screws.
- Then secure the glass panel with the previously removed brackets and screws and attach the frame.
- Before installation, ensure there is no dirt or fingerprints on the mirrored glass panel, the inner sides of the side panels or the inner side of the front glass panel.
- Remove the suction cup and clean the glass panel of fingerprints and dirt using a non-abrasive glass cleaner.

Recommendation:
Do not dispose of the suction cup. Keep it in a safe place, as it is needed for maintenance and service work.

© LUMFIRE – All rights reserved

7. WALL MOUNTING (SUSPENDED)

Mounting on a Flat Wall

When mounting the fireplace on a wall or installing it in a wall or structure, the installation height can be freely chosen.

> **NOTE**
> Recommendation: A traditional fireplace is typically installed so that the lower edge of the glass panel is approximately 40–50 cm above the floor.

1. Remove the lower and upper mounting brackets attached to the fireplace and keep the fixing screws for later installation.
2. Determine the mounting height of the lower edge of the fireplace and transfer this exactly onto the wall using a tape measure and spirit level.
3. Drill the fixing holes with a 10 mm drill bit according to the hole spacing of the mounting brackets and insert suitable wall plugs according to the wall material.
4. Attach the lower mounting bracket horizontally to the wall using the designated screws.
5. Measure the height of the fireplace from the lower mounting bracket and position the upper mounting bracket accordingly. Then secure it.



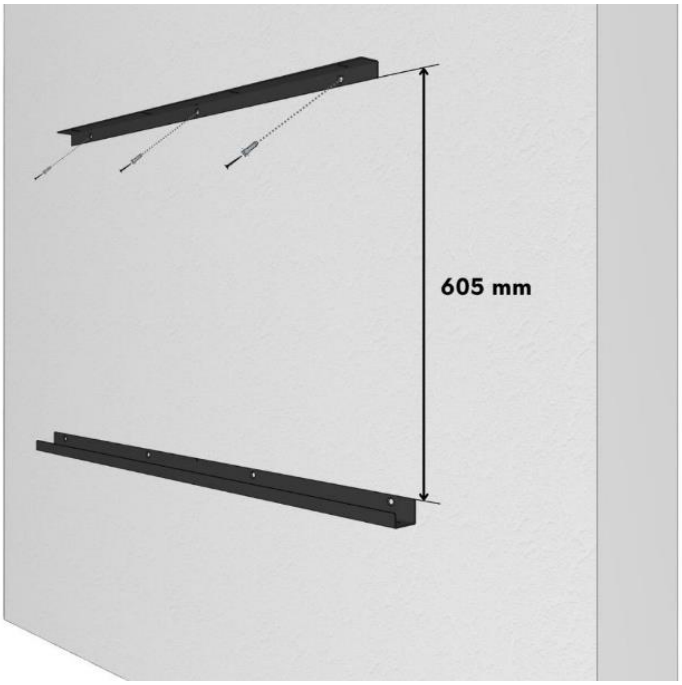

© LUMFIRE – All rights reserved

6. Hang the fireplace onto the lower mounting bracket and align it. (See illustration below.)
7. Finally, secure the fireplace to the upper and lower mounting brackets using the designated screws and check that all connections are firmly tightened.

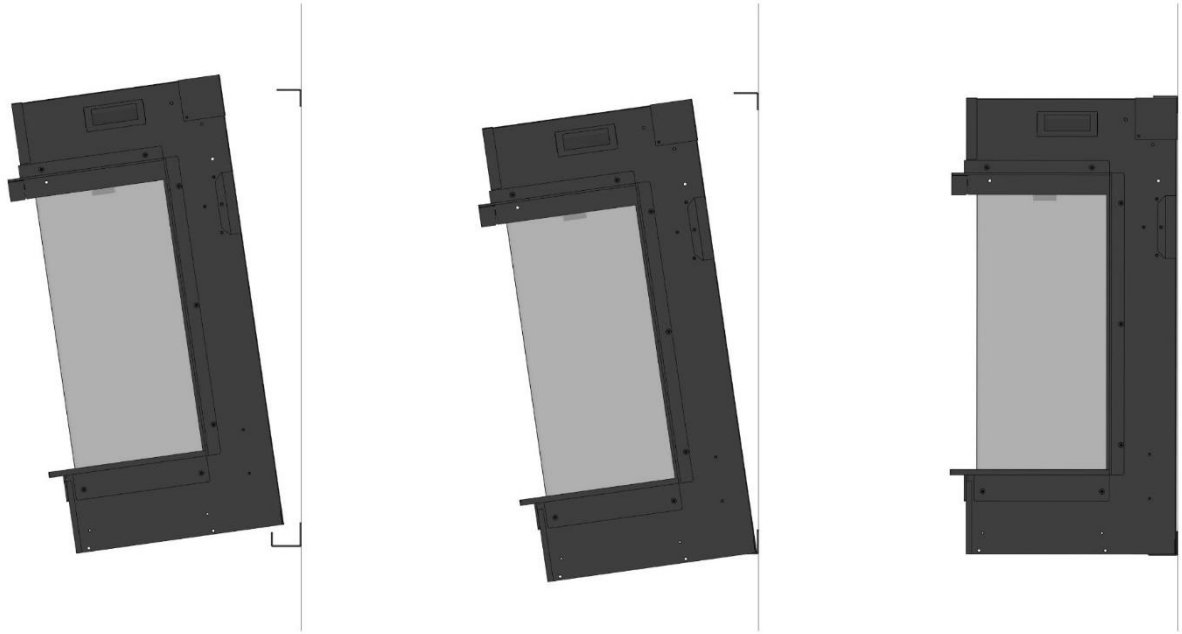

8. RECESSED WALL INSTALLATION

> ⚠ **WARNING**
> Before the wall is fully closed, test the appliance to ensure it is functioning correctly.

Minimum Dimensions – Front Installation

Dimension	800	1000	1300	1500	1800
Height (H)	666 mm	666 mm	666 mm	666 mm	666 mm
Width (W)	820 mm	1020 mm	1320 mm	1520 mm	1820 mm
Depth (D)	310 mm	310 mm	310 mm	310 mm	310 mm

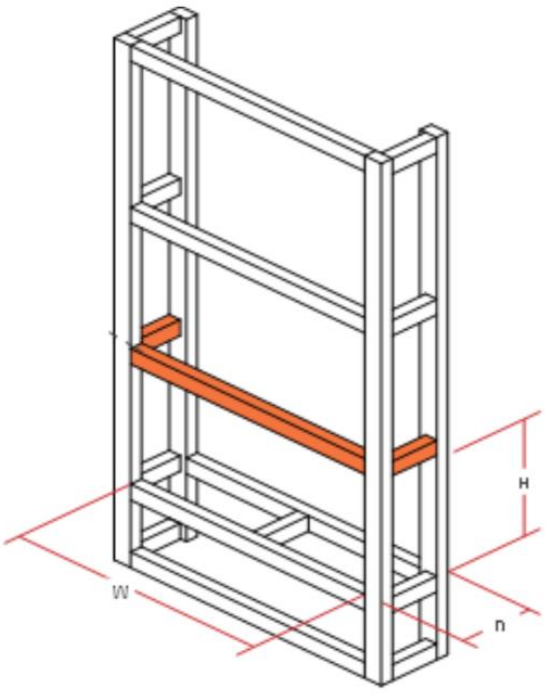

© LUMFIRE – All rights reserved

Minimum Dimensions – Corner Installation (with open corner)

Dimension	800	1000	1300	1500	1800
Height (H)	666 mm	666 mm	666 mm	666 mm	666 mm
Width (W)	815 mm	1015 mm	1315 mm	1515 mm	1815 mm
Depth (D)	310 mm	310 mm	310 mm	310 mm	310 mm

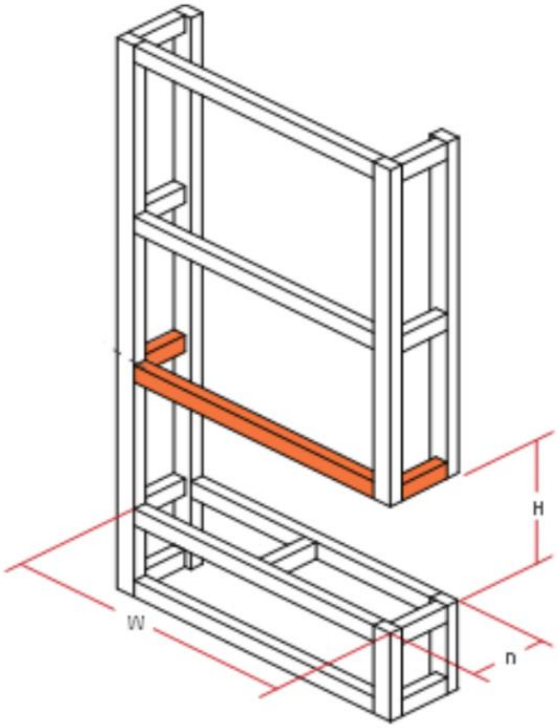

Minimum Dimensions – Three-sided Installation

Dimension	800	1000	1300	1500	1800
Height (H)	666 mm	666 mm	666 mm	666 mm	666 mm
Width (W)	810 mm	1010 mm	1310 mm	1510 mm	1810 mm
Depth (D)	310 mm	310 mm	310 mm	310 mm	310 mm

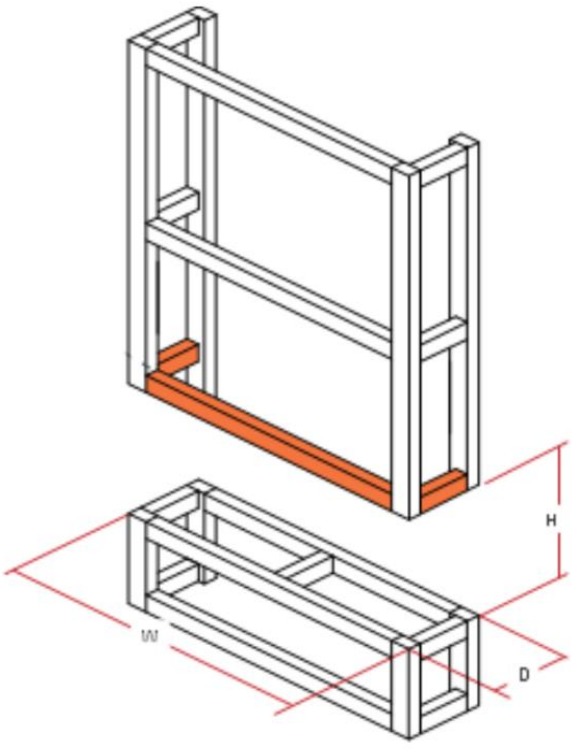

© LUMFIRE – All rights reserved

Installation Steps – Recessed Installation

ℹ NOTE
Please note that at least two persons are required for installation.
Please observe all installation preparations and notes before installation.

Installation Steps (Recessed Installation)

1. Remove the upper wall mounting rail attached to the fireplace.
2. Carefully slide the fireplace into the prepared installation opening.
3. Rotate the upper bracket and secure it to both the fireplace and the wall.
4. The wall construction can then be completed.

9. LOG SET AND EMBER BED INSTALLATION

Please note that the glass front must be removed and the appliance must be installed at its final location before the logs and flame bed are inserted. The appliance must not be moved afterwards.

The package contents include logs, both with and without illumination.
The illuminated logs must be connected to the wiring in the flame bed. The logs without illumination are placed evenly between the illuminated logs.

ℹ NOTE
It is recommended to arrange the logs and flame bed so that the wiring of the illuminated logs is not visible.

For optimal results when using the supplied decorative material, proceed as follows:

1. Mix the transparent and black glass pieces.
   Caution: Risk of injury from sharp edges – handle with care.
2. Distribute the glass pieces evenly across the entire ash bed.
3. Then distribute approximately 3/4 of the small black stones (vermiculite) evenly on top.
4. Connect the illuminated logs to the designated wiring.
5. Place the logs without illumination evenly between the illuminated logs.
6. Now distribute the large vermiculite pieces (flakes).
7. Then distribute the grey and black stones evenly.
8. Finally, distribute the remaining vermiculite.

For the most realistic appearance, the cables of the illuminated logs should no longer be visible.

It is possible to use additional decorative material to design the firebox. This must fit easily without scratching the glass or deforming the base of the ember bed. It must also not consist of sand or liquids, as this could compromise the safety of the appliance.

Use the following QR code to access the installation video for the log set and flame bed of the FORA electric fireplace:

© LUMFIRE – All rights reserved

10. CONTROLS, OPERATION AND MAINTENANCE

ℹ NOTE

The Lumfire Fora can be controlled via the touch control panel on the electric fireplace (top right on the frame), via the battery-operated remote control and via the Smart App (2.4 GHz Wi-Fi required). Control via Amazon Alexa or Google Smart Home is also possible.

Touch Control Panel

Button	Function	Action
MAIN SWITCH	**Mains switch**	Switches the appliance off completely and disconnects it from the mains.
POWER	**On / Standby**	Press once: switch on appliance, flame effect starts. Press again: flame effect off, standby mode.
FLAME COLOUR	**Change flame colour (13 options)**	Press to cycle through 13 flame colours. The last selected colour is saved.
HEATER	**Heating mode**	H-0: Heater off · H-1: Low heat setting · H-2: High heat setting. The fan continues to run for 8–10 seconds after the heater is switched off to prevent overheating.
TIMER	**Sleep timer (0.5–8 h)**	Press once: timer to 0.5 h. Continue pressing to increase in 0.5 h increments up to 8 h.

Remote Control

Button	Function	Action
	**On / Off (Standby)**	Press once to switch on, press again for off (standby)
	**Flame colour**	Switch between 13 flame colours. The flame must be switched on for the heater to function.
	**Flame brightness**	Increases or decreases the brightness of the flame.
	**Flame speed**	5 levels: 01 (very slow) / 02 (slow) / 03 (medium, default) / 04 (fast) / 05 (very fast)
	**Ember bed colour**	Switches between 13 colours of the ember bed.
	**Ember bed brightness**	5 levels: L5 (brightest) → L1 (pulsating) → L0 (off).
	**Top lighting**	Cycles through 13 colours of the top lighting.
	**Heating mode**	H-0: Off · H-1: Low · H-2: High
	**Timer**	Adjustable in 0.5 h increments up to 8 h.
	**Crackling effect**	Switch between 3 different types of crackling

© LUMFIRE – All rights reserved

	Crackling volume	4 levels: Low / Medium (default) / High / Off.
	Thermostat	Set target temperature. Hold for 5 seconds to switch between °C and °F.

Smart App

The Lumfire Fora supports the Tuya Smart App for iOS and Android.
A 2.4 GHz Wi-Fi network is required for operation.
With the app, you can fully control the appliance remotely, set timers, and customize flame effects individually – conveniently via your smartphone.

SETUP

1. Download
Search for “Tuya Smart” in the App Store or Google Play Store and install the app.
Activate GPS or location services on your smartphone before pairing.

2. Create account
Register with your email address or mobile number and set a password.

3. Add device
Log in to the app, tap “Add device” and activate Bluetooth on your smartphone.

Press and hold the button until a beep sounds. The electric fireplace is now in search mode and should appear in the app as an available device.

Select the device and tap “Connect”. Then enter your Wi-Fi details and confirm the entry.

The connection will then be established automatically.

4. Device added

The electric fireplace is now successfully connected to the app and can be controlled via it.

Use the following QR code to access an instructional video for setting up the app for smart control of the FORA electric fireplace:

© LUMFIRE – All rights reserved

Thermal Cut-off

If the heater reaches a critical temperature, it will switch off automatically.

Resetting the appliance:

1. Disconnect the appliance from the mains.
2. Set the control panel to “OFF”.
3. Wait at least 5 minutes.
4. Check that all air openings are free and not blocked.
5. Reconnect the appliance and restart it.

If the problem persists, have the wiring checked by a qualified electrician or contact support and await instructions.

Cleaning

- Before cleaning, ensure that the appliance is switched off at the fuse box and has completely cooled down.
- Clean the appliance with a clean, dry and lint-free cloth. Do not use cleaning or abrasive agents.
- Do not use brass polish or household cleaners, as these may damage the metal surface
- Regularly check whether dust has accumulated on the heater and remove it with a clean, dry cloth or vacuum cleaner. This should be done regularly.
- All further service and maintenance work must be carried out exclusively by qualified personnel or under their instruction.

Maintenance

⚠ **DANGER!**
Risk of electric shock!
Before carrying out any work on the appliance, ensure that the power supply has been switched off at the fuse box and that no voltage is present.

⚠ **WARNING!**
Work on the appliance may only be carried out in compliance with all required safety measures.

⚠ **NOTE**
Maintenance and repair work must be carried out exclusively by qualified technicians or under their instruction.
In the event of a service requirement, please contact customer service or an authorised technician.

Storage:

When not in use, store the appliance in a clean, dry location.

© Lumfire. All rights reserved. Material contained in this publication may not be reproduced in whole or in part, without prior permission in writing of Lumfire.

Troubleshooting

PROBLEM	CAUSE	SOLUTION
NO POWER TO APPLIANCE	Power cable not plugged in	Check whether the supply cable is firmly plugged in and securely fastened with a P-clip.
	Circuit board / PCB	Replacement part required
	Socket	Check whether the socket is switched on
NO LIGHTING	Dimmer set too low	Use the remote control or the app to adjust the dimmer settings
	LED failure	Replacement part required.
LED FLICKERING	LED cable connections	Ensure that all connections are firmly seated and correctly connected.
	Damaged cable	Replacement part required.
	Defective LED	Replacement part required.
FLAME ILLUMINATED BUT WITHOUT MOVEMENT	Spindle	Check whether the spindle is firmly attached to the motor.
	Motor	A new motor may be required.
LOGS NOT FULLY ILLUMINATED ACROSS THE ENTIRE FIRE	Wiring and plug connections of the logs	Remove glass panel, check whether all logs are firmly connected to each other
	LED of the logs	A log may need to be replaced
	LED of the ember bed	Replacement part required
HEATER BLOWING COLD AIR	The safety protection may have been triggered	Check whether there are any obstructions around the heater. If the problem persists and the appliance is installed in a wall recess or fireplace, check with the installer whether the opening is fully sealed against draughts and air currents
HEATER DOES NOT SWITCH ON AT ALL	Thermostat set too low	Use the remote control or the app to increase the temperature
HEATER SWITCHES OFF SHORTLY AFTER BEING SWITCHED ON	Thermostat set too low	Use the remote control or the app to increase the temperature
REMOTE CONTROL NOT RESPONDING	Connection to appliance lost	Switch the appliance off and on again using the rocker switch
	Batteries	Replace with 2 × AAA batteries
GLOWING LOGS NOT WORKING	Poor connection	Check whether all connections are firmly seated,
	Damaged cable	Replacement part required
	Defective LED	Replacement part required
	Lighting dimmed down	Use the app or the remote control to increase the lighting
RHYTHMIC CLICKING	Loose cable	Ensure that all flame effect LEDs are attached to the LED strip and positioned outside the range of movement of the spindle
DEVICE CANNOT BE PAIRED	Space after the email address	Remove the space from the email address
	Incorrect Wi-Fi password	Check whether the password was entered correctly
	Required 2.4 GHz network not available	Check 2.4 GHz internet connection. Restart router

© LUMFIRE – All rights reserved